ROI

Stool

Design / Christophe Delcourt
Made in France / Portugal

COLLECTION
PARTICULIERE
{*objets de nécessité*}

COLLECTION PARTICULIERE
contact@collection-particuliere.fr / www.collection-particuliere.fr

ROI

Stool

Design / Christophe Delcourt
Made in France / Portugal

stool
dimensions : 49 x 35 x h 45 cm
seat height 42,5 cm

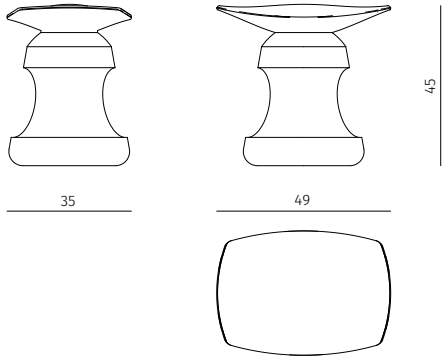

Materials	Finishes
ceramic	enamelled ceramic range
ceramic / leather	enamelled ceramic range / leather range
walnut / leather	choice of walnut tints / brown leather
marble	white calacatta
marble	black marquina
marble	grey Saint-Laurent
travertine	beige roman unfilled
brushed oak	choice of brushed oak tints
brushed spruce	choice of brushed spruce tints
marble	paonazzo

Non-contractual lead time of 8 weeks.

FOU

Stool

Design / Christophe Delcourt
Made in France

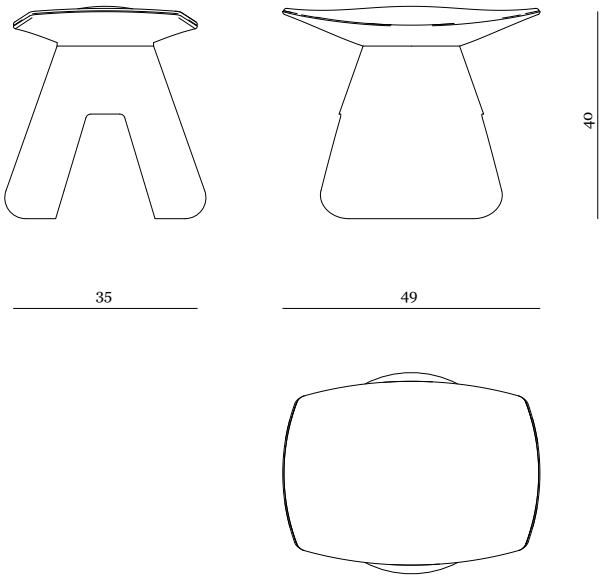

dimensions : 49 x 35 x h 40 cm
seat height 38 cm

Materials	Finishes
walnut / leather	choice of walnut tints / leather range

Non-contractual lead time of 8 weeks.

COLLECTION PARTICULIERE
contact@collection-particuliere.fr / www.collection-particuliere.fr

MAT

Stool

Design / Christophe Delcourt
Made in France

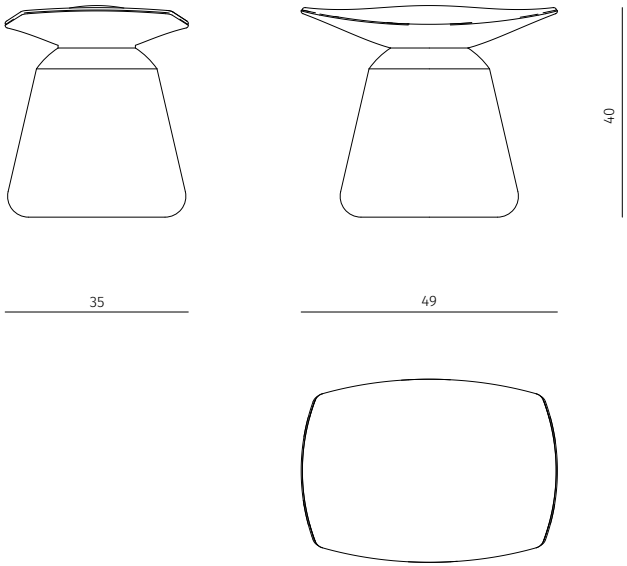

dimensions : 49 x 35 x h 40 cm
seat height 38 cm

Materials	Finishes
walnut / leather	choice of walnut tints / leather range

Non-contractual lead time of 8 weeks.