LEK

Sofa and armchair

Design / Christophe Delcourt

Made in France

COLLECTION PARTICULIERE

OBJETS MOBILIER
47 rue de Babylone 75007 PARIS / +33 (0)1 42 71 34 84
contact@collection-particuliere.fr / www.collection-particuliere.fr

LEK

Sofa and armchair

Design / Christophe Delcourt
Made in France

armchair
dimensions : 85 x 78 x h73, h76, h79 cm / COM: 3,2 ml
3 seat height options : 42, 45, 48 cm / seat depth 51 cm

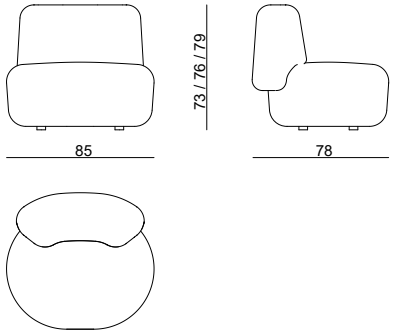

Materials	Finishes
without fabric	(-)
fabric	Early range
fabric	Edmund range
fabric	Dutton range
fabric	Enders range

swivel armchair
dimensions : 85 x 78 x h75 cm / COM: 3,4 ml
seat height 45 cm / seat depth 51 cm

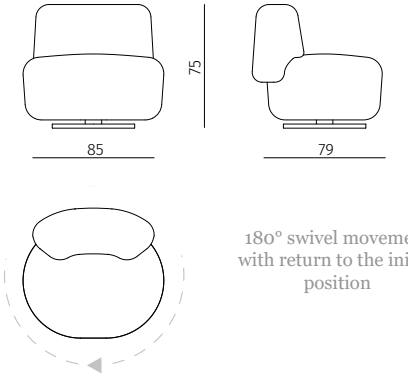

180° swivel movement with return to the initial position

Materials	Finishes
without fabric	(-)
fabric	Early range
fabric	Edmund range
fabric	Dutton range
fabric	Enders range

Non-contractual lead time of 12 weeks.

COLLECTION PARTICULIERE

OBJETS MOBILIER
47 rue de Babylone 75007 PARIS / +33 (0)1 42 71 34 84
contact@collection-particuliere.fr / www.collection-particuliere.fr

LEK

Sofa and armchair

Design / Christophe Delcourt
Made in France

curved banquette 219
dimensions : 219 x 109 x h73, h76, h79 cm / COM: 8,3 ml
3 seat height options : 42, 45, 48 cm / seat depth 51 cm

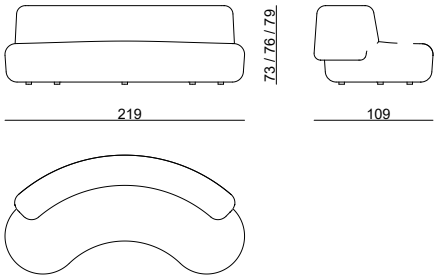

Materials	Finishes
without fabric	(-)
fabric	Early range
fabric	Edmund range
fabric	Dutton range
fabric	Enders range

curved banquette 280
dimensions : 280 x 120 x h73, h76, h79 cm / COM: 14 ml
3 seat height options : 42, 45, 48 cm / seat depth 51 cm

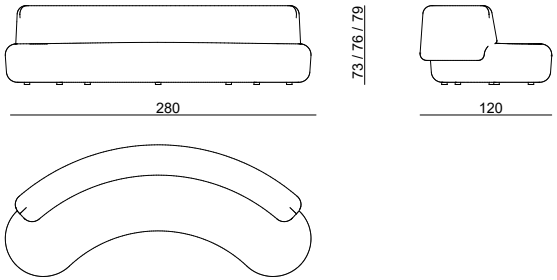

Materials	Finishes
without fabric	(-)
fabric	Early range
fabric	Edmund range
fabric	Dutton range
fabric	Enders range

Non-contractual lead time of 12 weeks.

COLLECTION PARTICULIERE

OBJETS MOBILIER
47 rue de Babylone 75007 PARIS / +33 (0)1 42 71 34 84
contact@collection-particuliere.fr / www.collection-particuliere.fr

LEK

Sofa and armchair

Design / Christophe Delcourt
Made in France

curved banquette 317
dimensions : 317 x 150 x h73, h76, h79 cm / COM: 15 ml
3 seat height options : 42, 45, 48 cm / seat depth 51 cm

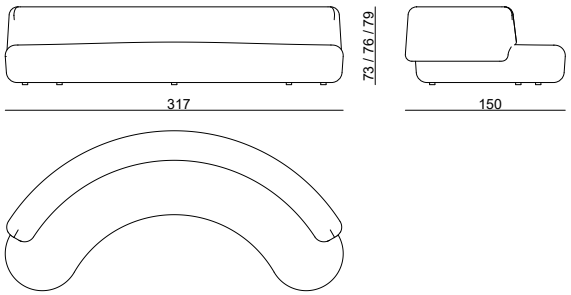

Materials	Finishes
without fabric	(-)
fabric	Early range
fabric	Edmund range
fabric	Dutton range
fabric	Enders range

double curved banquette
dimensions : 347 x 183 x h73, h76, h79 cm / COM: 20 ml
3 seat height options : 42, 45, 48 cm / seat depth 51 cm

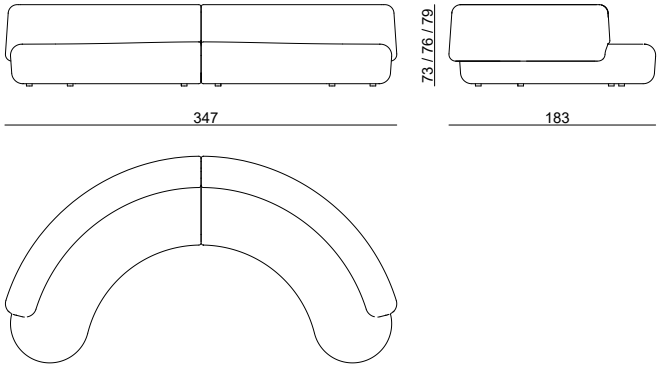

Materials	Finishes
without fabric	(-)
fabric	Early range
fabric	Edmund range
fabric	Dutton range
fabric	Enders range

Non-contractual lead time of 12 weeks.

COLLECTION PARTICULIERE

OBJETS MOBILIER
47 rue de Babylone 75007 PARIS / +33 (0)1 42 71 34 84
contact@collection-particuliere.fr / www.collection-particuliere.fr

LEK

Sofa and armchair

Design / Christophe Delcourt
Made in France

straight banquette 260
dimensions : 260 x 79 x h73, h76, h79 cm / COM: 9 ml
3 seat height options : 42, 45, 48 cm / seat depth 51 cm

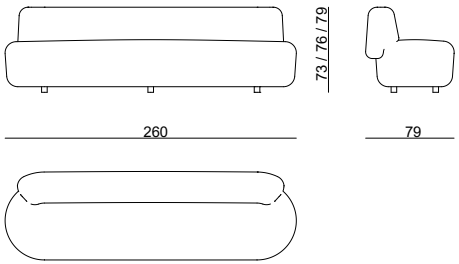

Materials	Finishes
without fabric	(-)
fabric	Early range
fabric	Edmund range
fabric	Dutton range
fabric	Enders range

straight banquette 300
dimensions : 300 x 79 x h73, h76, h79 cm / COM: 10 ml
3 seat height options : 42, 45, 48 cm / seat depth 51 cm

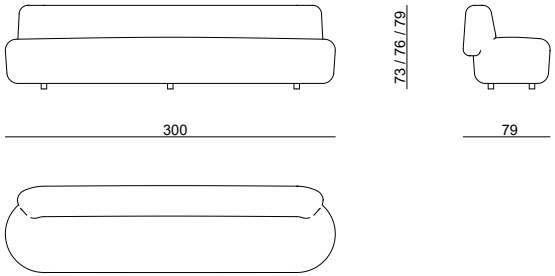

Materials	Finishes
without fabric	(-)
fabric	Early range
fabric	Edmund range
fabric	Dutton range
fabric	Enders range

Non-contractual lead time of 12 weeks.

COLLECTION PARTICULIERE

OBJETS MOBILIER
47 rue de Babylone 75007 PARIS / +33 (0)1 42 71 34 84
contact@collection-particuliere.fr / www.collection-particuliere.fr

TERMS OF SALE

The company OBJETS MOBILIER holds the registered trademark DELCOURT COLLECTION, as well as the registered trademark COLLECTION PARTICULIERE. Unless otherwise expressly stipulated, our general conditions of sale, delivery, and payment are as follows. The mere fact of placing an order implies the waiver by the buyer of his own general conditions of purchase and the acceptance of the following terms:

1 - ORDER - By order, we mean any order relating to our goods, as they appear on our price list, specifying the references of the products, using the nomenclature, the designations, the references of the products, and the finishes appearing on our documents. The images used on all our documents are not contractual. The orders transmitted to our company are considered as final orders after reception of the deposit and our order confirmation or proforma invoice mentioning the exact designation of the articles quantified according to the tariff in force at the date of the order. Taxes are calculated at the rates in force on the day of the invoice. No cancellation or modification of an order can be accepted from the eighth day following receipt of our order confirmation or proforma invoice. Drawings, sketches, indications of weights, and measures are given as an indication and consequently do not engage the responsibility of OBJETS MOBILIER. The Company reserves the right to make any modification to its models without having the obligation to inform its customers and declines any responsibility for this fact.

2 - PRICES - The prices of the referenced products are set out in the DELCOURT COLLECTION & COLLECTION PARTICULIERE price lists in effect on the day the order is placed. Our prices, always indicated exclusive of all taxes, are subject to change due to the application of a contribution to the cost of eliminating furniture waste, as provided for in Article R543-247 of the Environmental Code. All custom-made furniture will be subject to a specific estimate following a price request from the customer.

3 - TRANSPORTATION AND STORAGE - Unless otherwise stated, our prices are established ex-works Paris (EXW) and our goods travel at the risk of the consignee. Any loss or deterioration of goods occurring during transportation cannot be the subject of a complaint to OBJETS MOBILIER. All reservations must be systematically addressed to the carrier upon delivery and confirmed by registered letter with acknowledgment of receipt within 48 hours.

Our prices do not include storage. If the goods are not collected within 30 days when being notified of delivery, e fee of 25 euro per day and per item will be charged and must be paid prior delivery. The delivery date provided is based upon prompt receipt of a 50% deposit. Lead time is about 8 to 16 weeks, depending on the type of goods and the supplier.

This period can be longer for specific requests.

The delivery time is an estimation, provided only as an indication, the non-respect of the delay cannot give rise to damages.

4 - WARRANTY - The warranty consists solely in the replacement of products recognized as non-conforming or affected with a hidden defect or, at the sole discretion of OBJETS MOBILIER, in the reimbursement of the invoiced price, but does not raise any right to damages. It is up to the buyer to provide all the justifications proving the defects or the breaches noticed. However, given that our work is handmade and that some of the materials used are natural (wood/leather/fabric), there may be differences or irregularities in grain, color, or shade that cannot be considered as defects. In case of alterations or deformations of the materials, we will not be able to accept claims if the conditions of transport, storage, or installation do not correspond to our standards.

5 - PAYMENT TERMS - Invoices are payable to OBJETS MOBILIER by wire transfer in euros. Unless otherwise agreed or stipulated, orders are to be paid by a down payment of 50% at the order, the balance being due before shipping. All wire transfers must specify the reference of the order as indicated in OBJETS MOBILIER's documents. All bank fees related to payments shall be borne by the Buyer. In the event of late payment by the Buyer, OBJETS MOBILIER shall be entitled to claim damages, to rectify on previously established written agreements, to suspend future deliveries, to request full payment at the time of the order for the latter, to modify its general terms of payment and to require a guarantee. Any delay in repayment shall give rise to interest on arrears in an amount equivalent to 3 times the legal interest rate in force (Decision n°2009-138- February 9th), from the due date until the date of actual payment.

Late payment penalties are due without the need for a notice or reminder.

For professionals, a minimum fixed indemnity of 40 euros for collection will be requested (Decision n°2012-1115- October 9th).

6 - SPARE PARTS - Spare parts essential to the use of our furniture are available for a period of two years from the date of discontinuation of the model concerned, except for lighting and decorative accessories, for which the period is set at six months. Do not fall within the scope of Decree No. 2014-1482: any accessory integrated into the furniture, coating, finish, padding, replacement part similar to the original part.

7 - RETENTION OF TITLE - All goods sold remain the property of OBJETS MOBILIER until full payment of the price. From the time of delivery, the buyer is constituted custodian and guardian of the aforesaid goods. In the event of non-payment, OBJETS MOBILIER reserves the right to terminate the sale and reclaim the goods delivered, the return costs being borne by the Buyer. The payments already made to OBJETS MOBILIER will remain acquired as a penalty clause. No goods may be returned by the Buyer without the prior written consent of OBJETS MOBILIER. The risks in the event of loss or deterioration of the goods shall be borne by the Buyer upon delivery. In the event of a return of the claimed goods, the Buyer shall also be liable for compensation corresponding to the loss of value of the goods.

8 - INTELLECTUAL PROPERTY - All technical documents, including drawings and technical plans, given to the Buyer, remain the exclusive property of OBJETS MOBILIER, the sole owner of intellectual property rights on these documents, and must be returned at his request. Our customers agree not to make any use of these documents.

9 - FORCE MAJEURE - Any event beyond the control of OBJETS MOBILIER due to a case of force majeure (such as strikes, floods, fires, disruptions or interruptions in transport, difficulties in the supply of raw materials or energy) suspends the execution of its obligations for the duration of the force majeure event.

10 - ATTRIBUTION OF JURISDICTION - The Commercial Court of Paris shall have exclusive jurisdiction over any dispute that may arise between OBJETS MOBILIER and any of its co-contractors. French law is the only law applicable with the exclusion of the United Nations Convention on Contracts for the International Sale of Goods of April 11th, 1980.

COLLECTION PARTICULIERE

OBJETS MOBILIER
47 rue de Babylone 75007 PARIS / +33 (0)1 42 71 34 84
contact@collection-particuliere.fr / www.collection-particuliere.fr

Photo credits ©Francis Amiand ©Bruno Comtesse & ©Jean-François Gaté/ All rights reserved to ©Objets Mobilier - Actual products may differ from pictures.